# CL2X16-D1MJ1V
# CC-Link/LT Remote I/O Module

Thank you very much for purchasing this product.

Please read this manual thoroughly before starting to use the product and handle the product properly.

# User's Manual

| | |
|---|---|
| MODEL | CL2X16-D1MJ1V-U-HW |
| MODELCODE | 13JY39 |
| IB(NA)-0800392-C(1406)MEE | |

© 2007 MITSUBISHI ELECTRIC CORPORATION

## SAFETY PRECAUTIONS

(Read these precautions before using.)
Please read this manual carefully and pay special attention to safety in order to handle this product properly. Also pay careful attention to safety and handle the module properly. These precautions apply only to Mitsubishi equipment. Refer to the user's manual of the CPU module to use for a description of the programmable controller system safety precautions. In this manual, the safety precautions are classified into two levels: "⚠WARNING" and "⚠CAUTION".

| | |
|---|---|
| ⚠WARNING | Indicates that incorrect handling may cause hazardous conditions, resulting in death or severe injury. |
| ⚠CAUTION | Indicates that incorrect handling may cause hazardous conditions, resulting in minor or moderate injury or property damage. |

Under some circumstances, failure to observe the precautions given under "⚠CAUTION" may lead to serious consequences. Observe the precautions of both levels because they are important for personal and system safety. Make sure that the end users read this manual and then keep the manual in a safe place for future reference.

### [DESIGN PRECAUTIONS]

⚠ **WARNING**

- Configure an interlock circuit in a sequence program so that the system operates on the safety side using the communication status information in the event the data link falls into a communication problem.
  Otherwise, erroneous output and malfunction may result in accidents.
- Input could be switched on or off when a problem occurs in the remote I/O modules. So build an external monitoring circuit that will monitor any input signals that could cause a serious accident.

### [DESIGN PRECAUTIONS]

⚠ **CAUTION**

- Do not have control cables and communication cables bundled with or placed near by the main circuit and/or power cables.
  Wire those cables at least 100mm(3.94 inch) away from the main circuit and/or power cables. It may cause malfunction due to noise interference.

### [INSTALLATION PRECAUTIONS]

⚠ **CAUTION**

- Use the module in an environment that meets the general specifications contained in this manual. Using this module in an environment outside the range of the general specifications could result in electric shock, fire, erroneous operation, and damage to or deterioration of the product.
- Do not directly touch the module's conductive parts.
  Doing so could cause malfunction or trouble in the module.
- Securely fix the module in place using the DIN rail.
  If the module is not securely fixed, it may fall off or cause malfunction.

### [WIRING PRECAUTIONS]

⚠ **WARNING**

- Completely turn off the externally supplied power used in the system when installing or placing wiring. Not completely turning off all power could result in electric shock or damage to the product.

### [WIRING PRECAUTIONS]

⚠ **CAUTION**

- Wire the module correctly upon verifying the product's rated voltage and the connector pin arrangement. Connecting to a power supply different from rating or miss-wiring may cause fire and/or product failure.
- Make sure foreign objects do not get inside the module, such as dirt and wire chips. It may cause fire, product failure or malfunction.

### [STARTING AND MAINTENANCE PRECAUTIONS]

⚠ **WARNING**

- Switch off all phases of the externally supplied power used in the system when cleaning the module or retightening the terminal or module mounting screws. Not doing so could result in electric shock.

### [STARTING AND MAINTENANCE PRECAUTIONS]

⚠ **CAUTION**

- Do not disassemble or modify the module. Doing so may cause failure, malfunction, injury, or fire.
- The module case is made of resin; do not drop it or subject it to strong shock. A module damage may result.
- Completely turn off the externally supplied power used in the system before mounting or removing the module. Not doing so could result in damage to the product.
- Before touching the module, always touch grounded metal, etc. to discharge static electricity from the human body, etc.
  Not doing so can cause the module to fail or malfunction.

### [DISPOSAL PRECAUTIONS]

⚠ **CAUTION**

- When disposing of this product, treat it as industrial waste.

## *PRÉCAUTIONS DE SÉCURITÉ*

*(Lire ces précautions avant usage.)*
*Prière de lire attentivement ce manuel. Prêter une attention particulière à tout ce qui a trait à la sécurité pour utiliser le produit correctement.*
*Ces précautions ne concernent que l'équipement Mitsubishi. Dans le manuel de l'utilisateur du module CPU correspondant, voir l'exposé des précautions de sécurité concernant le système de l'automate programmable.*
*Dans ce manuel, les précautions de sécurité sont classées en deux niveaux, à savoir : "⚠AVERTISSEMENT" et "⚠ATTENTION"*

| | |
|---|---|
| ⚠*AVERTISSEMENT* | *Attire l'attention sur le fait qu'une négligence peut créer une situation de danger avec risque de mort ou de blessures graves.* |
| ⚠*ATTENTION* | *Attire l'attention sur le fait qu'une négligence peut créer une situation de danger avec risque de blessures légères ou de gravité moyennes ou risque de dégâts matériels.* |

*Dans certaines circonstances, le non-respect d'une précaution de sécurité introduite sous le titre "⚠ATTENTION"peut avoir des conséquences graves.*
*Les précautions de ces deux niveaux doivent être observées dans leur intégralité car elles ont trait à la sécurité des personnes et aussi du système.*
*Veiller à ce que les utilisateurs finaux lisent ce manuel qui doit être conservé soigneusement à portée de main pour s'y référer autant que de besoin.*

### *[PRÉCAUTIONS DE CONCEPTION]*

⚠ ***AVERTISSEMENT***

- *Prévoir dans le programme séquentiel un circuit de verrouillage sur la base des informations d'état de la communication, de façon à maintenir la sécurité de fonctionnement du système dans l'éventualité d'un problème de communication affectant la liaison de données. Faute de quoi, une sortie erronée ou un dysfonctionnement pourrait être à l'origine d'accidents.*
- *L'entrée peut être activée ou désactivée à la survenance d'un problème dans les modules E/S distants. On constituera donc un circuit de surveillance externe couvrant tous les signaux d'entrée qui pourraient être à l'origine d'un accident grave.*

### *[PRÉCAUTIONS DE CONCEPTION]*

⚠ ***ATTENTION***

- *Ne pas grouper ni placer à proximité les câbles de commande ou câbles de communication avec les câbles des circuits principaux et/ou d'alimentation. Câbler en plaçant ces câbles à une distance d'au moins 100mm (3,94 pouces) des câbles des circuits principaux ou de l'alimentation. Cela pourrait être à l'origine d'un bruit parasite entraînant des dysfonctionnements.*

### *[PRÉCAUTIONS D'INSTALLATION]*

⚠ ***ATTENTION***

- *Utiliser le module dans un environnement conforme aux spécifications générales présentées dans ce manuel. L'utilisation de ce module dans un environnement autre que celui prévu dans les spécifications générales peut être à l'origine d'un choc électrique, d'un départ de feu ou d'un dysfonctionnement, ou peut endommager ou détériorer le produit.*
- *Éviter tout contact direct avec les parties conductrices du module. Cela pourrait être à l'origine de dysfonctionnements ou autres problèmes avec le module.*
- *Fixer fermement le module en place sur le rail DIN.Si le module n'est pas fermement fixé, il risque de tomber ou il peut y avoir des dysfonctionnements.*

### *[PRÉCAUTIONS DE CÂBLAGE]*

⚠ ***AVERTISSEMENT***

- *Couper complètement l'alimentation externe utilisé par le système avant de mettre avant le câblage ou le raccordement de câbles. Ne pas couper complètement toutes les alimentations expose au risque de chocs électriques et d'endommagement du produit.*

### *[PRÉCAUTIONS DE CÂBLAGE]*

⚠ ***ATTENTION***

- *Câbler le module correctement après vérification de la tension nominale du produit et de l'affectation des broches de connecteur. Le raccordement d'une alimentation de tension nominale différente ou une erreur de câblage peuvent être à l'origine d'un départ de feu et/ou d'une panne du produit.*

### *[PRÉCAUTIONS DE CÂBLAGE]*

⚠ ***ATTENTION***

- *Veiller à éviter toute pénétration d'impuretés, copeaux de câblage ou autre corps étranger dans le module. Cela pourrait être à l'origine d'un départ de feu, ou du panne ou d'un dysfonctionnement du produit.*

### *[PRÉCAUTIONS DE DÉMARRAGE ET DE MAINTENANCE]*

⚠ ***AVERTISSEMENT***

- *Avant le nettoyage du module ou le resserrage des vis de borne ou des vis de fixation du module, couper les alimentations externes utilisées par le système sur toutes les phases. Faute de quoi, il y a risque de choc électrique.*

### *[PRÉCAUTIONS DE DÉMARRAGE ET DE MAINTENANCE]*

⚠ ***ATTENTION***

- *Ne pas démonter ni modifier le module. Cela pourrait être à l'origine de pannes, de dysfonctionnements, de blessures ou d'un départ de feu.*
- *Ne pas faire tomber ou soumettre le module à des chocs car son boîtier en plastique est fragile. Il pourrait en résulter un endommagement du module.*
- *Couper complètement l'alimentation externe utilisé par le système avant de mettre en place ou de retirer le module. Faute de quoi, il y a risque d'endommagement du produit.*
- *Avant de toucher au module, se débarrasser de la charge électrostatique qu'accumule le corps humain en touchant un objet métallique raccordé à la terre. Faute de quoi, il y a risque de panne ou de dysfonctionnement du module.*

### *[PRÉCAUTIONS DE MISE AU REBUT]*

⚠ ***ATTENTION***

- Lors de sa mise au rebut, ce produit doit être traité comme un déchet industriel.

## CONDITIONS OF USE FOR THE PRODUCT

(1) Mitsubishi programmable controller ("the PRODUCT") shall be used in conditions;
i) where any problem, fault or failure occurring in the PRODUCT, if any, shall not lead to any major or serious accident; and
ii) where the backup and fail-safe function are systematically or automatically provided outside of the PRODUCT for the case of any problem, fault or failure occurring in the PRODUCT.

(2) The PRODUCT has been designed and manufactured for the purpose of being used in general industries.
MITSUBISHI SHALL HAVE NO RESPONSIBILITY OR LIABILITY (INCLUDING, BUT NOT LIMITED TO ANY AND ALL RESPONSIBILITY OR LIABILITY BASED ON CONTRACT, WARRANTY, TORT, PRODUCT LIABILITY) FOR ANY INJURY OR DEATH TO PERSONS OR LOSS OR DAMAGE TO PROPERTY CAUSED BY the PRODUCT THAT ARE OPERATED OR USED IN APPLICATION NOT INTENDED OR EXCLUDED BY INSTRUCTIONS, PRECAUTIONS, OR WARNING CONTAINED IN MITSUBISHI'S USER, INSTRUCTION AND/OR SAFETY MANUALS, TECHNICAL BULLETINS AND GUIDELINES FOR the PRODUCT.
("Prohibited Application")
Prohibited Applications include, but not limited to, the use of the PRODUCT in;
- Nuclear Power Plants and any other power plants operated by Power companies, and/or any other cases in which the public could be affected if any problem or fault occurs in the PRODUCT.
- Railway companies or Public service purposes, and/or any other cases in which establishment of a special quality assurance system is required by the Purchaser or End User.
- Aircraft or Aerospace, Medical applications, Train equipment, transport equipment such as Elevator and Escalator, Incineration and Fuel devices, Vehicles, Manned transportation, Equipment for Recreation and Amusement, and Safety devices, handling of Nuclear or Hazardous Materials or Chemicals, Mining and Drilling, and/or other applications where there is a significant risk of injury to the public or property.

Notwithstanding the above, restrictions Mitsubishi may in its sole discretion, authorize use of the PRODUCT in one or more of the Prohibited Applications, provided that the usage of the PRODUCT is limited only for the specific applications agreed to by Mitsubishi and provided further that no special quality assurance or fail-safe, redundant or other safety features which exceed the general specifications of the PRODUCTs are required. For details, please contact the Mitsubishi representative in your region.

## 1. Overview

This user's manual explains specifications and names of individual parts of the CL2X16-D1MJ1V type CC-Link/LT remote I/O module (hereinafter abbreviated as remote I/O module).

## 2. Specifications

### 2.1 General Specifications

The general specifications for the remote I/O module are shown in the following table.

| Item | Specifications |
|---|---|
| Operating ambient temperature<br>*Température ambiante de fonctionnement* | 0 to 55°C<br>*0 à 55 °C* |
| Storage ambient temperature | -25 to 75°C |
| Operating ambient humidity | 5 to 95%RH, non-condensing |
| Storage ambient humidity | 5 to 95%RH, non-condensing |
| Vibration resistance | Compliant with JIS B 3502 and IEC 61131-2<br>Under intermittent vibration: Frequency 5 to 8.4Hz, Constant acceleration -, Half amplitude 3.5mm; 8.4 to 150Hz, 9.8m/s², -; 10 times each in X, Y, Z directions<br>Under continuous vibration: 5 to 8.4Hz, -, 1.75mm; 8.4 to 150Hz, 4.9m/s², -; - |
| Shock resistance | Compliant with JIS B 3502 and IEC 61131-2<br>(147 m/s², 3 times each in 3 directions X, Y, Z) |
| Operating atmosphere | No corrosive gases |
| Operating altitude | 0 to 2000m |
| Installation location | Inside a control panel *3 |
| Overvoltage category *1 | II or less |
| Pollution degree *2 | 2 or less |

*1 This indicates the section of the power supply to which the equipment is assumed to be connected between the public electrical power distribution network and the machinery within premises.
Category II applies to equipment for which electrical power is supplied from fixed facilities. The surge voltage withstand level for up to the rated voltage of 300V is 2500V.
*2 This index indicates the degree to which conductive material is generated in terms of the environment in which the equipment is used.
Pollution level 2 is when only non-conductive pollution occurs. A temporary conductivity caused by condensing must be expected occasionally.
*3 It can also be used in an environment other than on the control panel if the conditions such as usage ambient temperature and humidity are satisfied.

### 2.2 Performance specifications

The performance specifications for the remote I/O module are shown in the following table.

| Item \ Type | | | CL2X16-D1MJ1V | |
|---|---|---|---|---|
| Number of inputs | | | 16 points | |
| Isolation method | | | Photocoupler isolation | |
| Rated input voltage | | | 24V DC (Common with the module power supply) | |
| Rated input current | | | Approx. 4mA | |
| Operating voltage range | | | Common with the module power supply | |
| Input derating | | | Refer to the derating chart. | |
| ON voltage/ON current | | | 19V or higher/3mA or higher | |
| OFF voltage/OFF current | | | 11V or lower/1.7mA or lower | |
| Input resistance | | | 5.6kΩ | |
| Response time | Response time setting | | 0.5ms (High speed response type) | 1.5ms (Standard type) |
| | OFF →ON | TYP. | 0.05ms | - |
| | | MAX. | 0.1ms | 1.5ms |
| | ON →OFF | TYP. | 0.2ms | - |
| | | MAX. | 0.5ms | 1.5ms |
| Common wiring method | | | 16 points/1 common (2 points)<br>(MIL connector 1-wire type) | |
| Input method | | | Positive common | |
| Number of stations occupied | | | In 4-point mode: Occupies 4 stations, In 8-point mode: Occupies 2 stations, In 16-point mode: Occupies 1 station | |
| Maximum allowable current for I/O power supply | | | 1.0A or lower/common | |
| Module power supply | Voltage | | 20.4 to 28.8V DC (ripple ratio: within 5%) | |
| | Current consumption | | 45mA or lower (When 24V DC and all points on) | |
| | Current on startup | | 70mA or lower (24V DC) | |
| Noise durability | | | DC type noise voltage 500Vp-p, noise width 1μs, noise carrier frequency 25 to 60Hz (noise simulator condition)<br>First transient/noise burst IEC 61000-4-4: 2kV | |
| Withstand voltage | | | 500V AC for 1 minute between primary (external DC terminal) and secondary (internal circuit) | |
| Insulation resistance | | | 10MΩ or more between primary (external DC terminal) and secondary (internal circuit) when measured with a 500V DC insulation resistance tester | |

| Item \ Type | CL2X16-D1MJ1V |
|---|---|
| Protection class | IP2X |
| Weight | 0.05kg |
| I/O part connection method | 20 pin MIL connector |
| Module installation method | DIN rail installation, Can be installed in six directions |

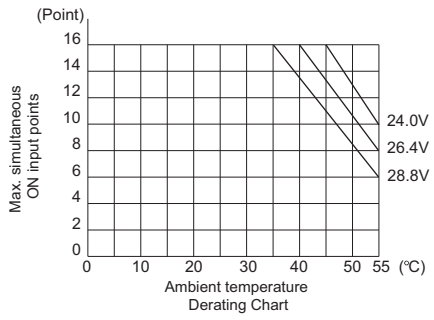

Derating Chart

## 3. Part Names

This section explains the names of the components for the remote I/O module.

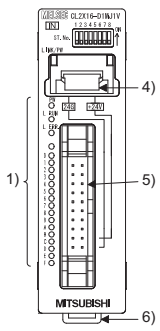


| Connector for I/O interface | Pin No. | Signal name | Pin No. | Signal name |
|---|---|---|---|---|
| | CON1-20 | X0 | CON1-19 | X8 |
| | CON1-18 | X1 | CON1-17 | X9 |
| | CON1-16 | X2 | CON1-15 | XA |
| | CON1-14 | X3 | CON1-13 | XB |
| | CON1-12 | X4 | CON1-11 | XC |
| | CON1-10 | X5 | CON1-9 | XD |
| | CON1-8 | X6 | CON1-7 | XE |
| | CON1-6 | X7 | CON1-5 | XF |
| | CON1-4 | +24V*1 | CON1-3 | +24V*1 |
| | CON1-2 | 24G*1 | CON1-1 | 24G*1 |

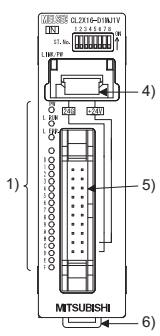


| *Connecteur pour interface E/S* | *Broche N°* | *Nom de signal* | *Broche N°* | *Nom de signal* |
|---|---|---|---|---|
| | *CON1-20* | *X0* | *CON1-19* | *X8* |
| | *CON1-18* | *X1* | *CON1-17* | *X9* |
| | *CON1-16* | *X2* | *CON1-15* | *XA* |
| | *CON1-14* | *X3* | *CON1-13* | *XB* |
| | *CON1-12* | *X4* | *CON1-11* | *XC* |
| | *CON1-10* | *X5* | *CON1-9* | *XD* |
| | *CON1-8* | *X6* | *CON1-7* | *XE* |
| | *CON1-6* | *X7* | *CON1-5* | *XF* |
| | *CON1-4* | *+24V*1* | *CON1-3* | *+24V*1* |
| | *CON1-2* | *24G*1* | *CON1-1* | *24G*1* |

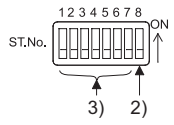


| Connector for CC-Link/LT interface | Pin No. | Signal name |
|---|---|---|
| | 1 | +24V |
| | 2 | DA |
| | 3 | DB |
| | 4 | 24G |

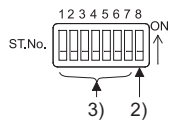


| *Connecteur pour interface CC-Link/LT* | *Broche N°* | *Nom de signal* |
|---|---|---|
| | *1* | *+24V* |
| | *2* | *DA* |
| | *3* | *DB* |
| | *4* | *24G* |

| No. | Item | Description | |
|---|---|---|---|
| 1) | Operating status indicator LEDs | LED name | Confirmation details |
| | | PW | On: Power supply on.<br>Off: The power supply is turned off or the voltage drop is too large. |
| | | L RUN | On: Normal communication.<br>Off: Communication cutoff (time expiration error). |
| | | L ERR. | On: Indicates that a communication data error has occurred or the setting switch is outside the allowable range.<br>Flicker at regular intervals: Indicates that the setting switch has been changed while current is being conducted. (The module continues to operate even while the LED is flickering. The changed settings will be reflected when the power has been restored.)<br>Flicker at irregular intervals: Indicates that the terminal resistor is left unconnected or that the module or connection cable are affected by noise.<br>Off: Normal communication. |
| | | 0 to F | Displays the ON/OFF status of the input. Turned on in the ON status and turned off in the OFF status. |
| 2) | Response time setting switch *2 (SW8) | Set the response time (OFF→ON/ON→OFF time) of the remote I/O module.<br>OFF is set as default (factory-set).<br>Noise may be taken in as input, if high speed response type is set. Be sure to set response time in consideration of the environment.<br>ON: 0.5ms (High speed response type)<br>OFF:1.5ms (Standard type) | |
| 3) | Station number setting switches *2 (SW1 to 7) | Select "10", "20" or "40" to set the tens place of the station number. Select "1", "2", "4" or "8" to set the ones place of the station number.<br>All switches are set to OFF at factory default setting.<br>Always set the station number within the range of 1 to 64.<br>A setting error occurs and "L ERR." LED flickers if the value outside the range 1 to 64 is set.<br>(Example) Set the switches as below when setting the station number to 32: | |

| Station number | Tens place | | | Ones place | | | |
|---|---|---|---|---|---|---|---|
| | 40 (SW1) | 20 (SW2) | 10 (SW3) | 8 (SW4) | 4 (SW5) | 2 (SW6) | 1 (SW7) |
| 32 | OFF | ON | ON | OFF | OFF | ON | OFF |

| | | |
|---|---|---|
| 4) | Connector for CC-Link/LT interface | Connector for CC-Link/LT communication line, module power supply and external power supply of the input part. |
| 5) | Connector for I/O interface | MIL connector for connecting input signals. |
| 6) | Hook for DIN rail | Hook for installing the module on a DIN rail. |

*1 Do not supply power to the power supply pin from the outside.
*2 Set up using a slotted screwdriver with a tip width of 0.9 mm or less.

## 4. Handling Precautions

***1.*** When using a DIN rail, attach the DIN rail after taking the following items into consideration:
- Applicable DIN rail types (conform to JIS C 2812)
TH35-7.5Fe
TH35-7.5Al
- Interval between the DIN rail's installation screws
Tighten the screws using a pitch of 200mm (7.87in.) or less when attaching a DIN rail.

***2.*** To attach the remote I/O module to the DIN rail, press the centerline area of the DIN rail hook beneath the module until a click is heard.

***3.*** When installing the remote I/O module into a panel, etc., provide 15mm (0.59 in.) or more of space between the top and bottom of the module and other structures or parts so that good ventilation and ease of operation when exchanging modules can be secured.

## 5. Wiring

## *5. Câblage*

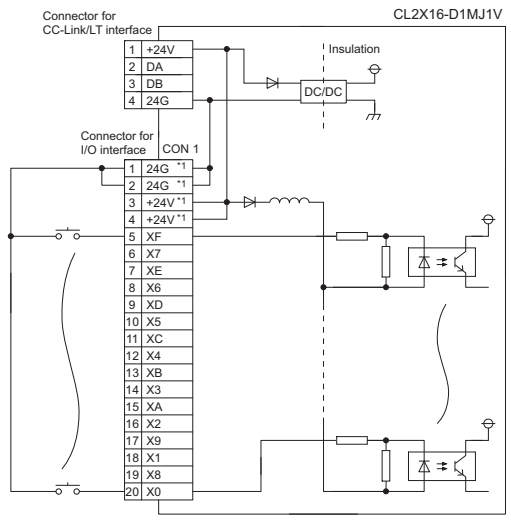


| English | *French* |
|---|---|
| Connector for CC-Link/LT interface | *Connecteur pour interface CC-Link/LT* |
| Connector for I/O interface | *Connecteur pour interface E/S* |
| Insulation | *Isolation* |

*1 Do not supply power to the power supply pin from the outside.
*1 *Ne pas alimenter la broche d'alimentation en courant électrique à partir de l'extérieur.*

## 6. External Dimensions

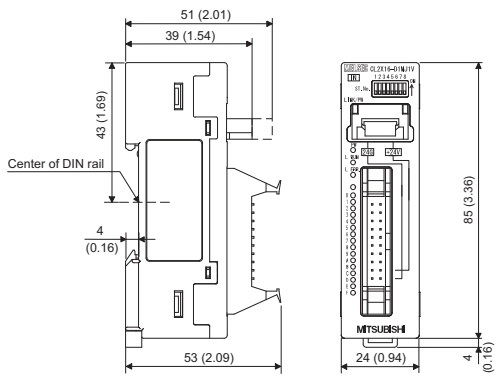


Unit: mm (inch)

## WARRANTY

Mitsubishi will not be held liable for damage caused by factors found not to be the cause of Mitsubishi; machine damage or lost profits caused by faults in the Mitsubishi products; damage, secondary damage, accident compensation caused by special factors unpredictable by Mitsubishi; damages to products other than Mitsubishi products; and to other duties.


| Country/Region | Sales office/Tel |
|---|---|
| U.S.A | Mitsubishi Electric Automation Inc.<br>500 Corporate Woods Parkway Vernon Hills, IL 60061, U.S.A.<br>Tel : +1-847-478-2100 |
| Brazil | MELCO-TEC Rep. Com.e Assessoria Tecnica Ltda.<br>Rua Correia Dias, 184, Edificio Paraiso Trade Center-8 andar<br>Paraiso, Sao Paulo, SP Brazil<br>Tel : +55-11-5908-8331 |
| Germany | Mitsubishi Electric Europe B.V. German Branch<br>Gothaer Strasse 8 D-40880 Ratingen, GERMANY<br>Tel : +49-2102-486-0 |
| U.K | Mitsubishi Electric Europe B.V. UK Branch<br>Travellers Lane, Hatfield, Hertfordshire., AL10 8XB, U.K.<br>Tel : +44-1707-276100 |
| Italy | Mitsubishi Electric Europe B.V. Italian Branch<br>Centro Dir. Colleoni, Pal. Perseo-Ingr.2<br>Via Paracelso 12, I-20041 Agrate Brianza., Milano, Italy<br>Tel : +39-039-60531 |
| Spain | Mitsubishi Electric Europe B.V. Spanish Branch<br>Carretera de Rubi 76-80,<br>E-08190 Sant Cugat del Valles, Barcelona, Spain<br>Tel : +34-93-565-3131 |
| France | Mitsubishi Electric Europe B.V. French Branch<br>25, Boulevard des Bouvets, F-92741 Nanterre Cedex, France<br>Tel : +33-1-5568-5568 |
| South Africa | Circuit Breaker Industries Ltd.<br>Private Bag 2016, ZA-1600 Isando, South Africa<br>Tel : +27-11-928-2000 |
| China | Mitsubishi Electric Automation (China) Ltd.<br>4/F Zhi Fu Plazz, No.80 Xin Chang Road, Shanghai 200003, China<br>Tel : +86-21-6120-0808 |
| Taiwan | Setsuyo Enterprise Co., Ltd.<br>6F No.105 Wu-Kung 3rd.Rd, Wu-Ku Hsiang,<br>Taipei Hsine, Taiwan<br>Tel : +886-2-2299-2499 |
| Korea | Mitsubishi Electric Automation Korea Co., Ltd.<br>1480-6, Gayang-dong, Gangseo-ku Seoul<br>157-200, Korea<br>Tel : +82-2-3660-9552 |
| Singapore | Mitsubishi Electric Asia Pte, Ltd.<br>307 Alexandra Road #05-01/02,<br>Mitsubishi Electric Building, Singapore 159943<br>Tel : +65-6470-2480 |
| Thailand | Mitsubishi Electric Automation (Thailand) Co., Ltd.<br>Bang-Chan Industrial Estate No.111 Moo 4, Serithai Rd,<br>T.Kannayao, A.Kannayao, Bangkok 10230 Thailand<br>Tel : +66-2-517-1326 |
| Indonesia | P.T. Autoteknindo Sumber Makmur<br>Muara Karang Selatan, Block A/Utara<br>No.1 Kav. No.11 Kawasan Industri Pergudangan<br>Jakarta - Utara 14440, P.O.Box 5045 Jakarta, 11050 Indonesia<br>Tel : +62-21-6630833 |
| India | Messung Systems Pvt, Ltd.<br>Electronic Sadan NO:III Unit No15, M.I.D.C Bhosari,<br>Pune-411026, India<br>Tel : +91-20-2712-3130 |
| Australia | Mitsubishi Electric Australia Pty. Ltd.<br>348 Victoria Road, Rydalmere, N.S.W 2116, Australia<br>Tel : +61-2-9684-7777 |

**MITSUBISHI ELECTRIC CORPORATION**
HEAD OFFICE : TOKYO BUILDING, 2-7-3 MARUNOUCHI, CHIYODA-KU, TOKYO 100-8310, JAPAN
NAGOYA WORKS : 1-14, YADA-MINAMI 5-CHOME, HIGASHI-KU, NAGOYA, JAPAN


When exported from Japan, this manual does not require application to the Ministry of Economy, Trade and Industry for service transaction permission.

Specifications subject to change without notice.